RSE 9 N AND O BLOCK RAINWATER								
S.No.	RAINWATER MANHOLE CHAMBER (R.W.C.)		LENGTH (FT IN)		LENGTH (METRE)	SLOPE	BASE DIAMETER	MANHOLE COVER DIAMETER
	FROM	TO	FEET	INCH	M	MM	MM	MM
1	1	2	30	0	9	20	900	600
2	2	3	37	3.5	11	20	900	600
3	3	4	37	6	11	20	900	600
4	4	5	37	6	11	20	900	600
5	5	6	37	6	11	20	900	600
6	6	7	37	6	11	20	900	600
7	7	8	37	6	11	20	900	600
8	8	9	55	0	17	20	900	600
9	9	10	62	6	19	40	900	600
10	10	11	37	6	11	20	900	600
11	11	12	37	6	11	20	900	600
12	12	13	37	6	11	20	900	600
13	13	14	37	6	11	20	900	600
14	14	15	37	6	11	20	900	600
15	15	16	37	6	11	20	900	600
16	16	17	37	6	11	20	900	600
17	17	18	27	6	8	20	900	600
18	18	19	33	0	10	40	900	600
19	19	20	33	0	10	20	900	600
20	20	21	20	3	6	60	900	600
21	42	41	30	7.5	9	20	900	600
22	41	40	36	10.5	11	20	900	600
23	40	39	37	6	11	20	900	600
24	39	38	37	6	11	20	900	600
25	38	37	37	6	11	20	900	600
26	37	36	37	6	11	20	900	600
27	36	35	37	6	11	20	900	600
28	35	34	55	0	17	40	900	600
29	34	33	62	6	19	40	900	600
30	33	32	37	6	11	20	900	600
31	32	31	37	6	11	20	900	600
32	31	30	37	6	11	20	900	600
33	30	29	37	6	11	20	900	600
34	29	28	37	6	11	20	900	600
35	28	27	37	6	11	20	900	600
36	27	26	37	6	11	20	900	600
37	26	25	37	6	11	20	900	600
38	25	24	33	0	10	20	900	600
39	24	23	33	0	10	20	900	600
40	23	22	21	6	7	20	900	600
41	21	22	29	0	9	20	900	600
42	43	44	60	0	18	40	900	600
43	44	45	60	0	18	40	900	600
44	45	46	45	0	14	20	900	600
45	46	47	45	0	14	20	900	600
46	47	48	110	0	34	60	900	600
47	48	49	60	0	18	40	900	600
48	49	50	60	0	18	40	900	600
49	50	51	55	0	17	40	900	600
50	52	53	34	0	10	40	900	600
51	53	OUT	75	0	23	40	900	600

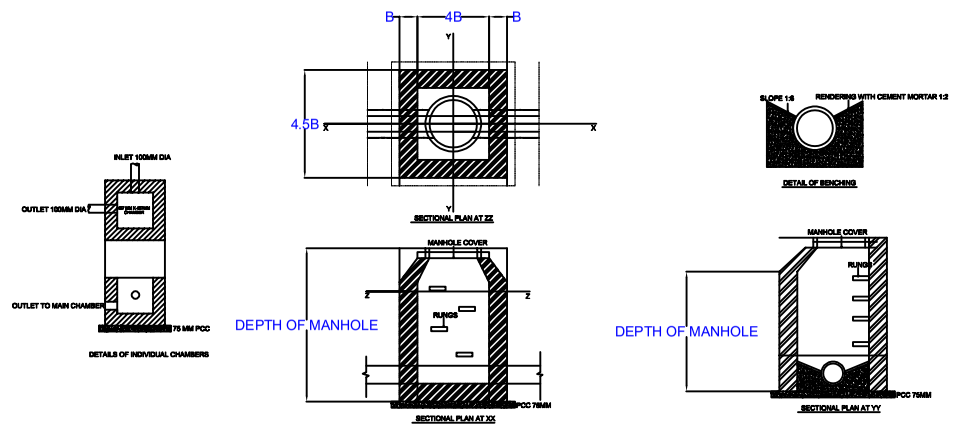

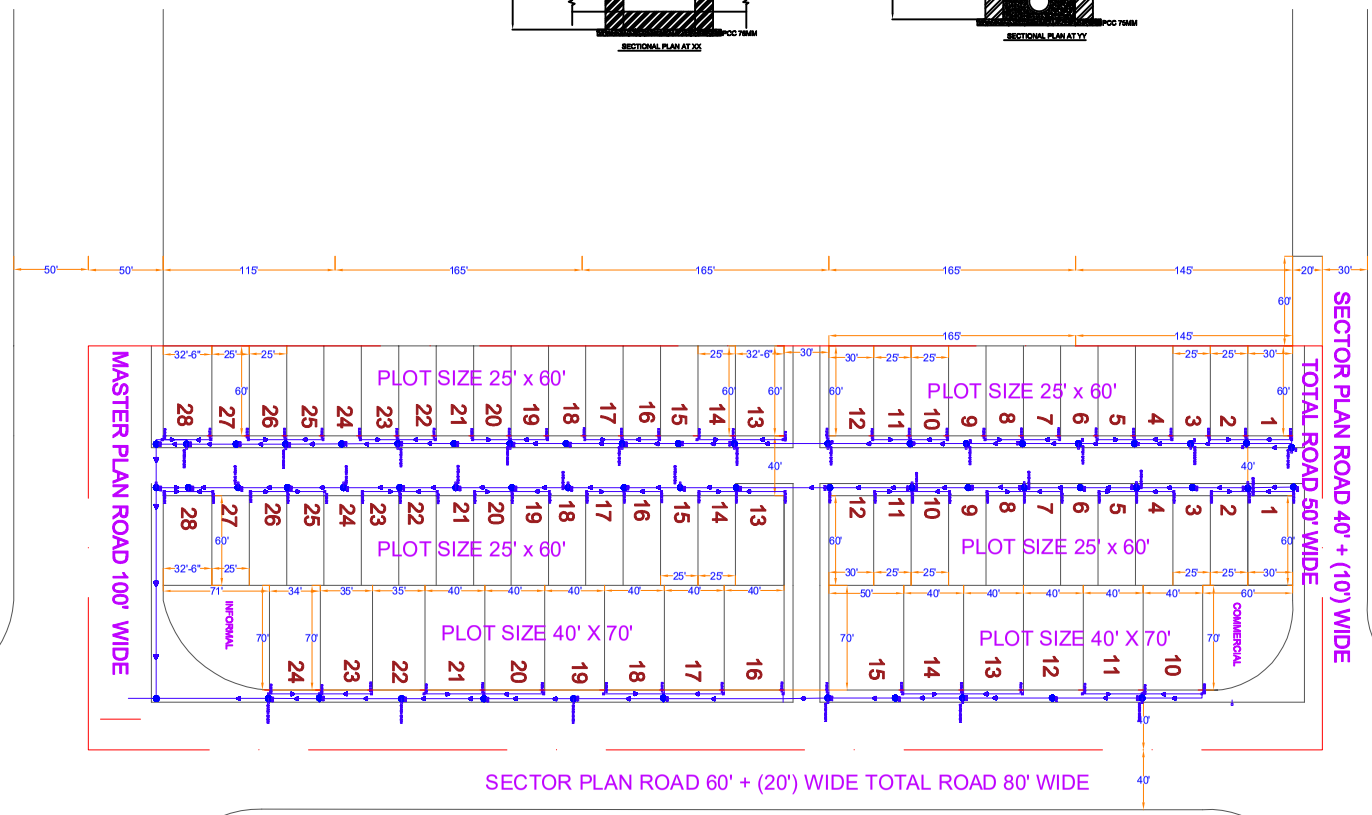

LEGEND

SYMBOL	DENOTION	DESCRIPTION
☒	R.W.CH.	INDIVIDUAL RAINWATER CHAMBERS
●	RX X DENOTES CHAMBER NUMBER	RAINWATER MANHOLE CHAMBERS
☒	S.CH.	INDIVIDUAL SEWER CHAMBERS
●	SX X DENOTES CHAMBER NUMBER	SEWER MANHOLE CHAMBERS

Address as per Layout Approval Letter vide Letter No. : Niyojan/2024/3002 Dated : 28-02-2024
Killa No. 4/2, 7/1, 14/2, 17/1, 5, 6, 15, 16, 24/4, 25/1, Square No. 31, Chak 4A Chotti Teh. & Dist. Sri Ganganagar, (Raj.) - 335001

PROJECT:-
RSE 9 N AND O BLOCK

LOCATION:-
SRIGANGANAGAR

DRAWING TITLE:-
RAINWATER LAYOUT

DATE:-
29/07/2024

GENERAL NOTES:-

Er. Piyush Bhardwaj
B. Tech (Civil)

BD 01