LEGEND-:	
• CWS	Ø25MM & Ø50MM CWSP
• FWS	Ø25MM & Ø50MM FWSP
	Ø20MM &Ø40MM . Ø50MM COLD WATER SUPPLY PIPE
	Ø20MM & Ø50MM FLUSHING WATER SUPPLY PIPE
	ISOLATION VALVE

ASHOK KUMAR KULDEEP
MEP CONSULTANT
DIP. MECH. (RAC), B.TECH MECH.

S.NO.	DESCRIPTION

PROJECT :

PROPOSED RESIDENTIAL FLATS ON KHASRA NO. 36/5, VILL.-MANDAU, TEH.-SANGANER, JAIPUR

ARCHITECT:-

Tushar Sogani Designs Pvt. Ltd.
architects n designers
Studio :- 400, F-72, "SURYODAY", Subhash Marg, Bagadiya Bhawan, C-Scheme, Jaipur-302001
TEL: +91-141-4004560, 4004537
email studio@tsdplarch.com
website : www.tsdplarch.com

PROJECT NAME:-
ACROPOLIS

CLIENT NAME:-
MGB Prime Estates LLP

DRAWING TITLE:-
STILT FLOOR_COLD WATER SUPPLY & FLUSHING WATER SUPPLY PLAN

DWG STATUS:-
FOR RERA SUBMISSION

MEP CONSULTANT:-
MEPEX
H.O.: S.R. SPORTS COMPLEX HATOJ MOD, SIRSI ROAD, JAIPUR, 302012.
B.O.: 401 & 402, RAGHU SAPPHIRE CENTER, CIVIL LINES, JAIPUR, 302006.
Ho. No.-9571758110, 7568093164
Email: mepexconsultants@gmail.com
teammepex@gmail.com

DEALT BY	CHKD BY
AZHAR	AVINASH
SHEET A1	DIRECTION N
DATE 24.10.2024	

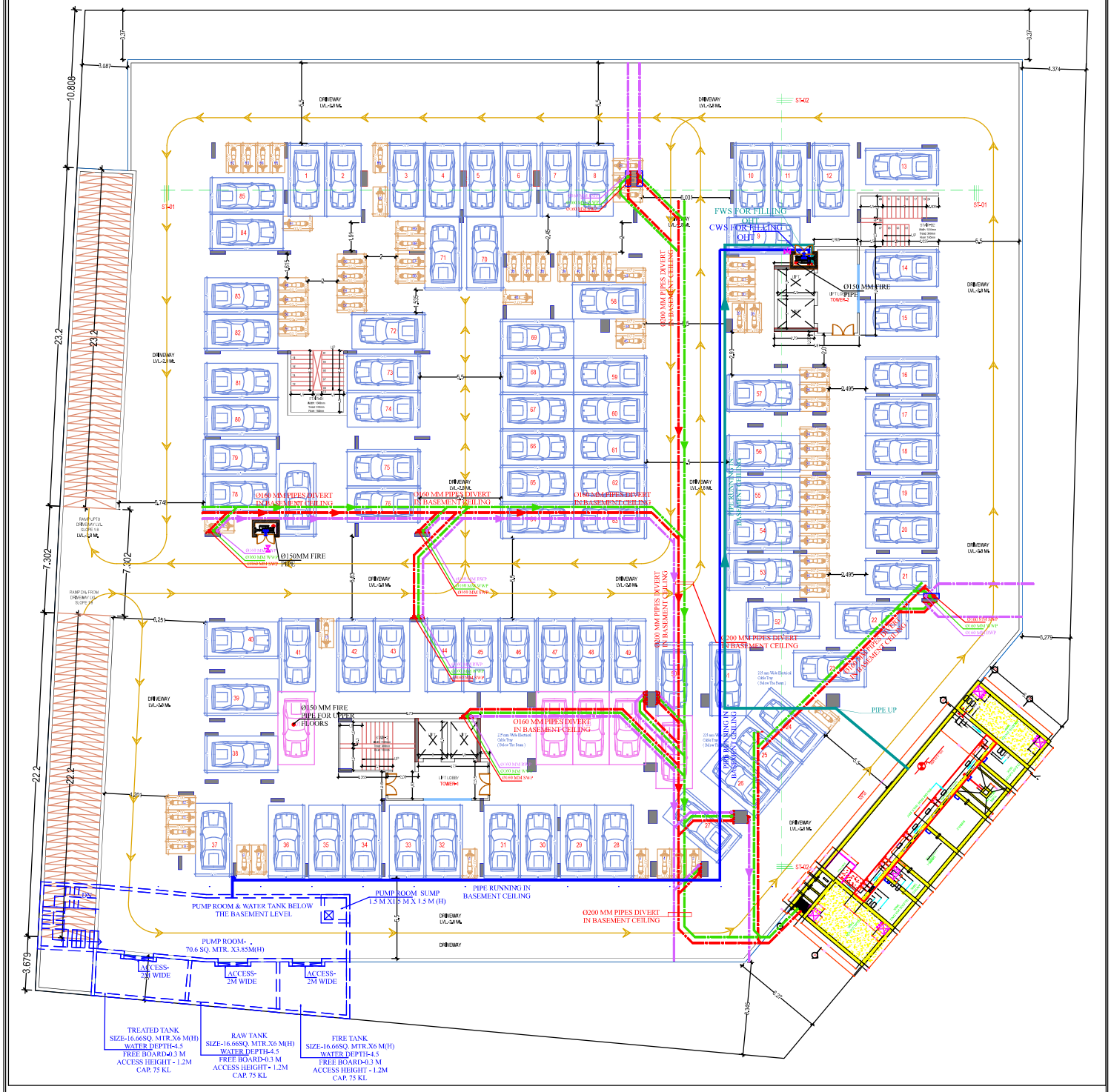

LEGEND-:	
SWP	Ø110MM & 160MM SOIL WATER PIPE
WWP	Ø110MM & 160MM WASTE WATER PIPE
RWP	Ø110MM & 160MM RAIN WATER PIPE
VP	Ø75MM VENT PIPE
CWS	COLD WATER SUPPLY PIPE
FWS	FLUSHING WATER SUPPLY PIPE
	Ø110MM&Ø160MM SOIL WASTE WATER PIPE
	Ø110MM & 160MM WASTE WATER PIPE
	Ø110MM & 160MM RAIN WATER PIPE
	Ø75MM VENT WATER PIPE
C.O.P.	CLEAN OUT POINT
C.O.P.	CLEAN OUT POINT
C.O.P.	CLEAN OUT POINT

ASHOK KUMAR KULDEEP
MEP CONSULTANT
DIP. MECH. (RAC), B.TECH MECH.

S.NO.	DESCRIPTION

PROJECT :
PROPOSED RESIDENTIAL FLATS ON KHASRA NO. 36/5, VILL.-MANDAU, TEH.-SANGANER, JAIPUR

ARCHITECT:-
Tushar Sogani Designs Pvt. Ltd.
architects n designers
Studio :- 400, F-72, "SURYODAY", Subhash Marg, Bagaliya Bhawan, C-Scheme, Jaipur-302001
TEL: +91-141-4004560, 4004537
email studio@tsdparch.com
website : www.tsdparch.com

PROJECT NAME:-
ACROPOLIS

CLIENT NAME:-
MGB Prime Estates LLP

DRAWING TITLE:-
BASEMENT FLOOR DRAINAGE & WATER DISTRUBITION PLAN

DWG STATUS:-
FOR RERA SUBMISSION

MEP CONSULTANT:-
MEPEX
H.O.: S.A. SPORTS COMPLEX HATOJ MOD, SIRSI ROAD, JAIPUR, 302012.
B.O.: 401 & 402, RAGHU SAPPHIRE CENTER, CIVIL LINES, JAIPUR, 302006.
Mo. No.-9571758110, 7568093164
Email mepexcons@gmail.com
teammepex@gmail.com

DEALT BY	CHKD BY
AZHAR	AVINASH
SHEET A1	DIRECTION N
DATE 24.10.2024	

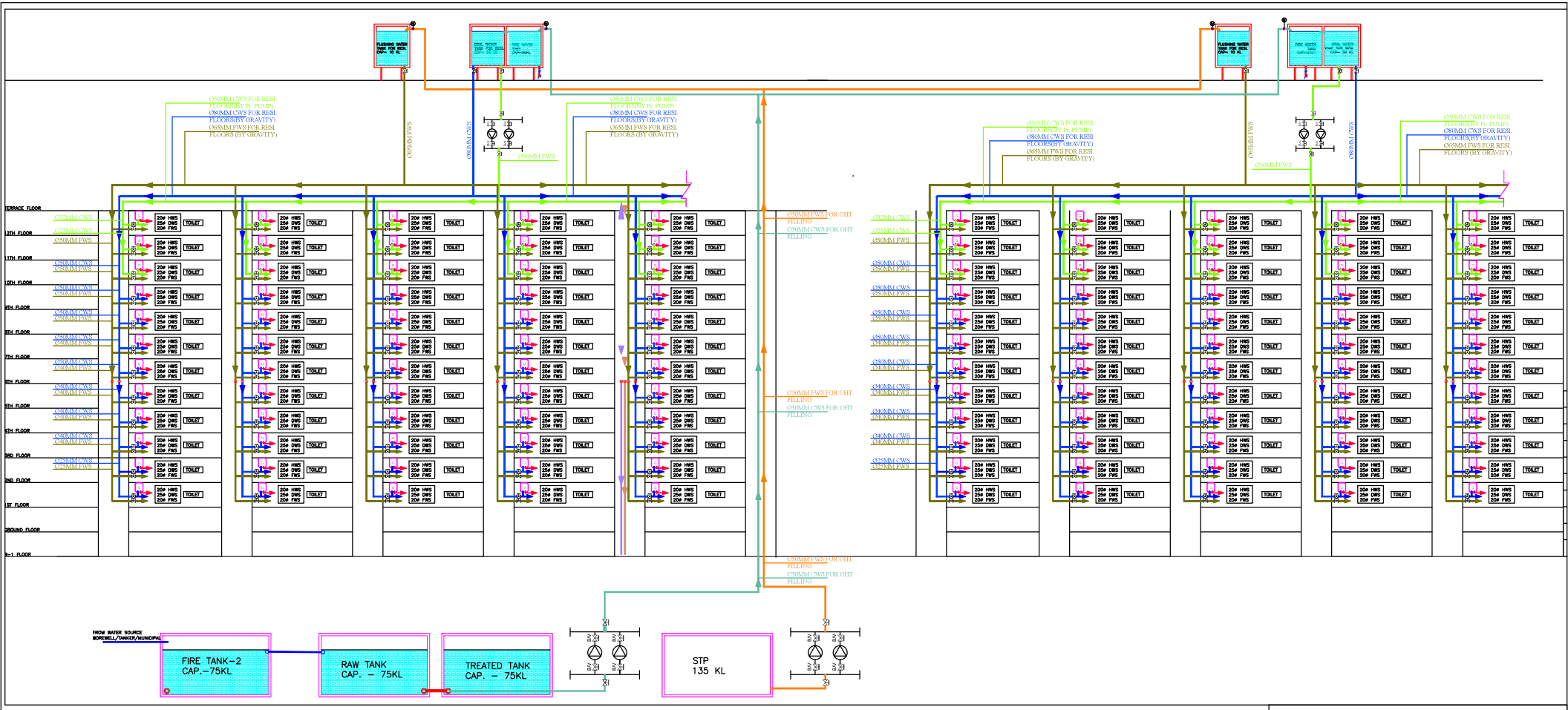

LEGEND:-	
CWS	COLD WATER SUPPLY PIP E
FWS	FLUSHING WATER SUPPLY PIPE
HWS	HOT WATER SUPPLY PIPE
DWS	DOMESTIC WATER SUPPLY PIPE
	ISOLATION/ON-OFF VALVE
	ELECTRIC GEYSER
	PRESSURE PUMP
	PRESSURE REDUCING VALVE
	MOTORIZED/SOLENOID VALVE

ASHOK KUMAR KULDEEP
MEP CONSULTANT
DIP. MECH. (RAC), B.TECH MECH.

S.NO.	DESCRIPTION

PROJECT :

PROPOSED RESIDENTIAL FLATS ON KHASRA NO. 36/5, VILL.-MANDAU, TEH.-SANGANER, JAIPUR

ARCHITECT:-

Tushar Sogani Designs Pvt. Ltd.
architects n designers
Studio :- 400, F-72, "SURYODAY", Subhash Marg, Bagadiya Bhawan, C-Scheme, Jaipur-302001
TEL: +91-141-4004560, 4004537
email: studio@tsdplarch.com
website : www.tsdplarch.com

PROJECT NAME:-

ACROPOLIS

CLIENT NAME:-

MGB Prime Estates LLP

DRAWING TITLE:-

WATER SUPPLY SCHEMATIC PLAN

DWG STATUS:-

FOR RERA SUBMISSION

MEP CONSULTANT:-

MEPEX

H.O.: S.R. SPORTS COMPLEX HATOJ MOD, SIRSI ROAD, JAIPUR, 302012.
B.O.: 401 & 402, RAGHU SAPPHIRE CENTER, CIVIL LINES, JAIPUR, 302006.
Mo. No.-9571758110, 7568093164
Email: mepexconsultant@gmail.com
teammepex@gmail.com

DEALT BY	CHKD BY
AZHAR	AVINASH
SHEET A1	DIRECTION N
DATE 24.10.2024	