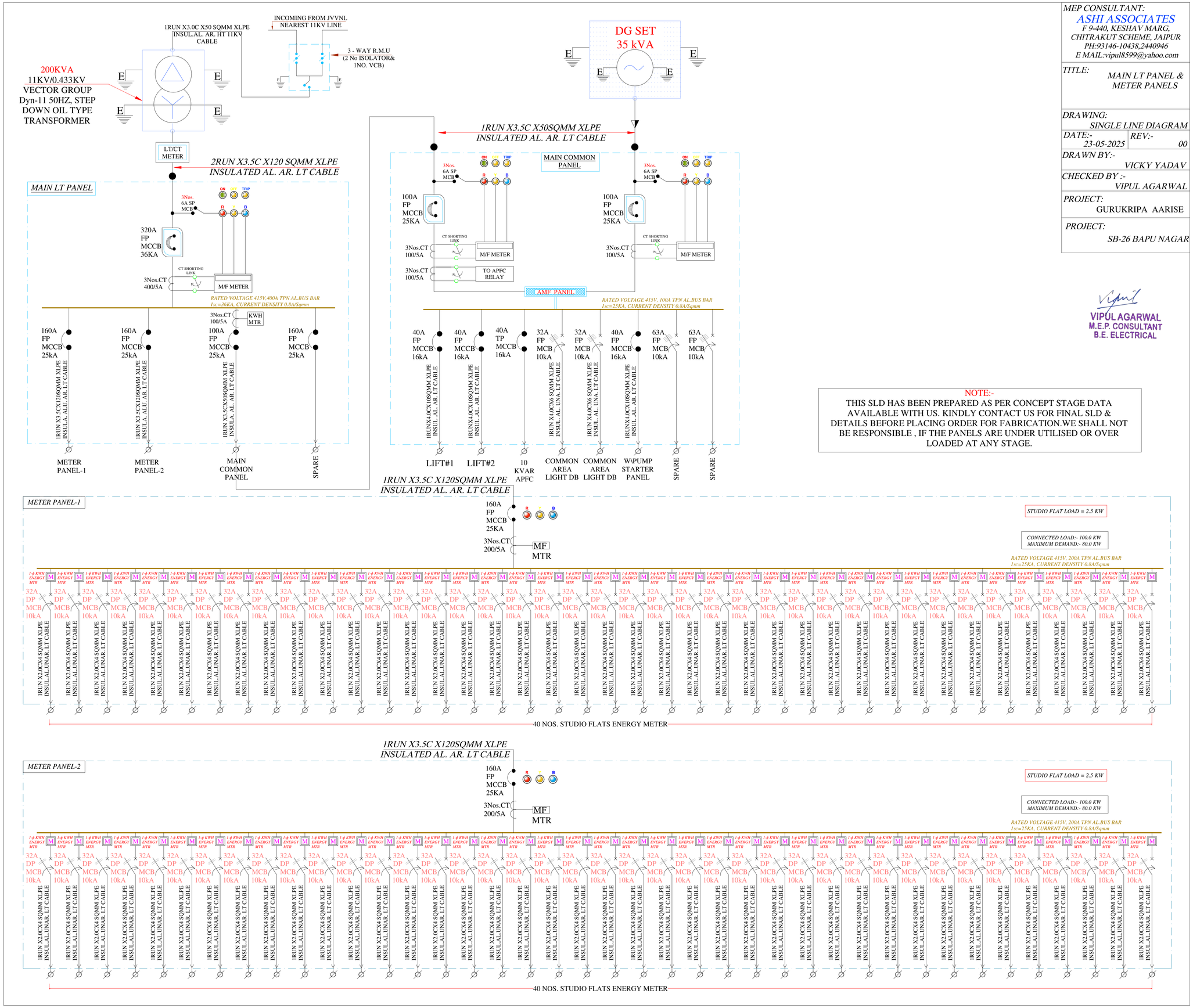

NOTE:-
THIS SLD HAS BEEN PREPARED AS PER CONCEPT STAGE DATA AVAILABLE WITH US. KINDLY CONTACT US FOR FINAL SLD & DETAILS BEFORE PLACING ORDER FOR FABRICATION.WE SHALL NOT BE RESPONSIBLE , IF THE PANELS ARE UNDER UTILISED OR OVER LOADED AT ANY STAGE.

MEP CONSULTANT:
ASHI ASSOCIATES
F 9-440, KESHAV MARG,
CHITRAKUT SCHEME, JAIPUR
PH:93146-10438,2440946
E MAIL:vipul8599@yahoo.com

TITLE: MAIN LT PANEL & METER PANELS

DRAWING: SINGLE LINE DIAGRAM

DATE:- 23-05-2025 | REV:- 00

DRAWN BY:- VICKY YADAV

CHECKED BY :- VIPUL AGARWAL

PROJECT: GURUKRIPA AARISE

PROJECT: SB-26 BAPU NAGAR

VIPUL AGARWAL
M.E.P. CONSULTANT
B.E. ELECTRICAL

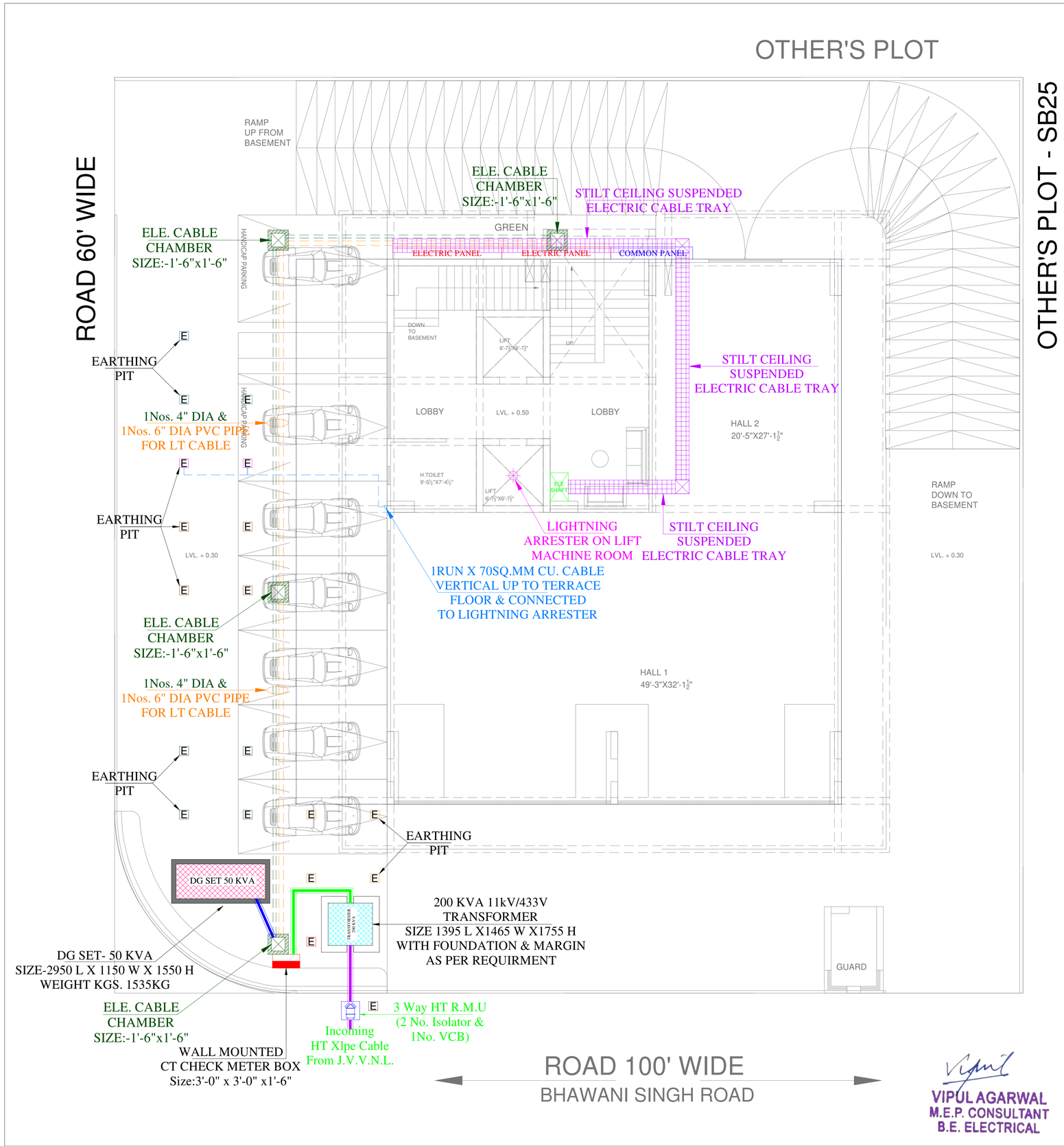

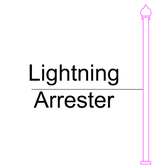

Model: Stormaster – ESE - 30 (Level 2/Medium Protection) (Protection radius - 25M, Mast Height -2 Mtr)

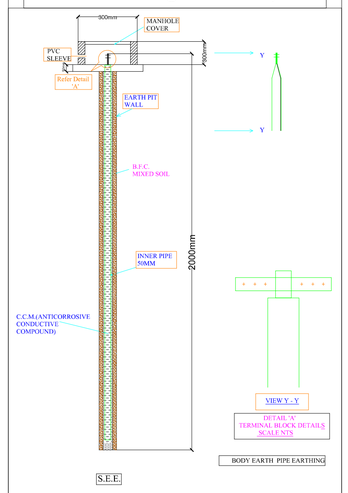

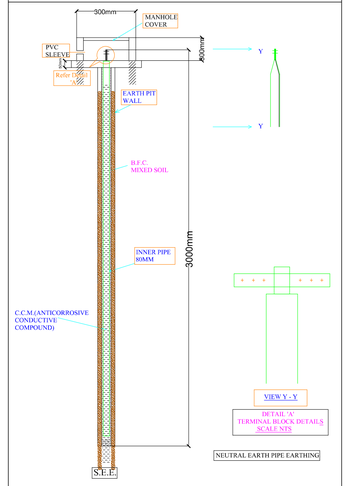

EARTHING DETAILS

01	E	50MM PIPE(2METER)	3WAY HT RMU BODY EARTH
01	E	50MM PIPE(2METER)	CT CHECK METER BOX BODY EARTH
02	E	50MM PIPE(2METER)	TRANSFORMER BODY EARTH
02	E	80MM PIPE(3METER)	TRANSFORMER NEUTRAL EARTH
02	E	50MM PIPE(2METER)	DG SET BODY EARTH
02	E	80MM PIPE(3METER)	DG SET NEUTRAL EARTH
02	E	50MM PIPE(2METER)	LIGHTNING ARRESTER BODY EARTH
02	E	50MM PIPE(2METER)	ELECTRIC PANEL BODY EARTH
01	E	50MM PIPE(2METER)	TELEPHONE EXCH. BODY EARTH
04	E	50MM PIPE(2METER)	LIFT PANEL BODY EARTH

NOTES:
1. ALL NEUTRAL EARTHS TO BE CONNECTED 50 X 3 GI EARTH STRIP FROM EARTH PIT TO EQUIPMENT.
2. ALL BODY EARTHS TO BE CONNECTED 25 X 3 GI EARTH STRIP FROM EARTH PIT TO EQUIPMENT.

VIPUL AGARWAL
M.E.P. CONSULTANT
B.E. ELECTRICAL

PROJECT:- GURUKRIPA AARISE	DRA.:- STILT FLOOR ELECTRIC SUB- STATION, CABLE ROUTE & LIGHTNING ARRESTER PLAN	DATE:- 21-05-2025	SCALE:- N.T.S.	ARCHITECT :- STUDIO-1503 Architects, Interior Designers Flat No:-G-101,PLOT-C1/44 SECTOR 1 Narayani Path,Chitrakoot , Jaipur PH: +91-141-3571121 email : studio1503@gmail.com
PROJECT ADD. :- STUDIO APARTMENTS AT PLOT No.SB26 BAPUNAGAR , JAIPUR		REV:- 00		

THIS DRAWING IS THE PROPERTY OF STUDIO1503 IT SHALL NOT BE COPIED OR USED WITHOUT THEIR WRITTEN PERMISSION OR MADE KNOWN TO A THIRD PARTY. THE INFORMATION IS ISSUED ON THE UNDERSTANDING THAT NO PART THERE OF SHALL BE DUPLICATED FOR THE PURPOSE OTHER THAN THE EXPRESSED PURPOSE.

SERVICES CONSULTANT:
ASHI ASSOCIATES
F 9 / 440 ,Keshav Marg, Chitrakut Scheme,Jaipur
PH:91-0-93146-10438 ,0141-2440946
Mail:vipul8599@yahoo.com

ROAD 100' WIDE

BHAWANI SINGH ROAD

VIPUL AGARWAL
M.E.P. CONSULTANT
B.E. ELECTRICAL

LEGENDS:

Qty.	I D	Symbol	Description
06	PL		STREET LIGHT

PROJECT :- GURUKRIPA AARISE PROJECT ADD. :- STUDIO APARTMENTS AT PLOT No.SB26 BAPUNAGAR , JAIPUR	DRA.:- STILT FLOOR EXTERNAL STREET LIGHT PLAN	DATE:- 21-05-2025 REV:- 00	SCALE:- N.T.S.		ARCHITECT :- **STUDIO-1503** Architects, Interior Designers Flat No:-G-101,PLOT-C1/44 SECTOR 1 Narayani Path,Chitrakoot , Jaipur PH: +91-141-3571121 email : studio1503@gmail.com

THIS DRAWING IS THE PROPERTY OF STUDIO-1503 IT SHALL NOT BE COPIED OR USED WITHOUT THEIR WRITTEN PERMISSION OR MADE KNOWN TO A THIRD PARTY.THE INFORMATION IS ISSUED ON THE UNDERSTANDING THAT NO PART THERE OF SHALL BE DUPLICATED FOR THE PURPOSE OTHER THAN THE EXPRESSED PURPOSE.

SERVICES CONSULTANT:
ASHI ASSOCIATES
F 9 / 440 ,Keshav Marg, Chitrakut Scheme,Jaipur
PH:91-0-93146-10438 ,0141-2440946
Mail:vipul8599@yahoo.com