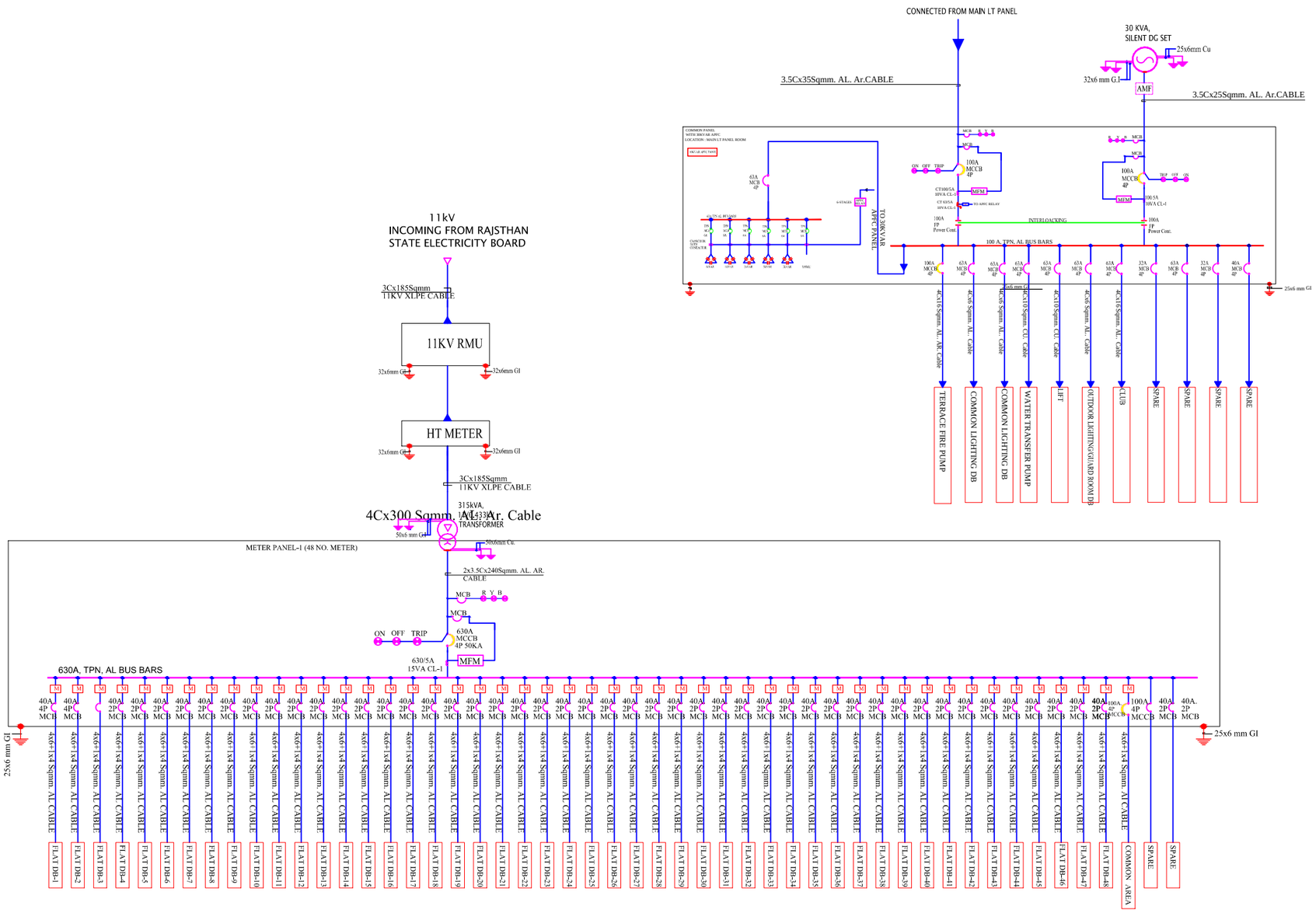

LEGEND

SYMB.	DESCRIPTION
A	AMMETER
V	VOLT METER
PF	POWER FACTOR METER
AVM	VOLTMETER, AMMITER, FRICTION METER
HZ	FREQUENCY METER
MWH	KILOWATT HOUR METER
KWH	KILOWATT METER
ASS	AMMETER SELECTOR SWITCH
VSS	VOLTMETER SELECTOR SWITCH
94	LOCKOUT RELAY
74	SUPERVISORY TRIP RELAY
27	UNDER VOLTAGE DEVICE
59	OVER VOLTAGE DEVICE
46	REVERSE POWER PHASE DEVICE
87	DIFFERENTIAL PROTECTION RELAY
50,51,51GS	OVER CURRENT & EARTH FAULT RELAY
59V,51V,46,49,49 32,37,27,59,81	MULTI FUCTION REALY
EDO	ELECTRICAL OPERATED MANUALLY DRAWOUT
CF	CONTROL FUSE
CT	CURRENT TRANSFORMER
TVM	TRIVECTOR METER
	INDICATING LAMP
	OVER LOAD RELAY
	POWER CONTACTOR
PT	POTENTIAL TRANSFORMER
DSM	DUAL SOURCE ELECTRONIC ENERGY METER
	GROUNDING
MPR	MICRO PROCESSOR BASED RELEASE
EEM	ELECTRONIC ENERGY METER
	AIR CIRCUIT BREAKER
	VACUUM CIRCUIT BREAKER
	MINATURE CIRCUIT BREAKER
	MOULDED CASE CIRCUIT BREAKER
	MOTOR PROTECTION CIRCUIT BREAKER

REVISION - 00

GENERAL NOTES :

1. ALL THE DIMENSIONS ON THE DRAWING ARE IN WRITTEN.
2. ONLY WRITTEN DIMENSIONS ARE TO BE FOLLOWED, DRAWING SHOULD NOT BE SCALED IN ANY CIRCUMSTANCES.
3. ALL MEASUREMENTS MUST BE CHECKED AND VERIFIED BY THE CONTRACTORS PRIOR TO EXECUTION OF WORK AT THE SITE.
4. THIS DRAWING IS TO BE READ IN CONJUNCTION WITH ALL RELEVANT STRUCTURAL, ARCHITECTURAL & FACILITY PLANNING DRAWINGS.
5. ANY DISCREPANCIES MUST BE BROUGHT TO THE NOTICE OF THE ENGINEER IMMEDIATELY & PRIOR TO EXECUTION AT SITE.
6. CO-ORDINATION WITH SERVICES SUCH AS HVAC, PLUMBING & ELECTRICAL, ETC. IS THE RESPONSIBILITY OF THE CONTRACTORS.
7. FOR DETAILS, REFER RELEVANT LARGE SCALE DETAIL DRGS. AS INDICATED.

LIGHTING LEGEND

SR.NO.	SYMBOL	DESCRIPTION	HEIGHT FROM FFL
1		CEILING TUBELIGHT POINT	CEILING
2		LED CEILING LIGHT POINT	CEILING
3		LED WALL BRACKET LIGHT POINT AT WALL	+7'-4"
4		6A SOCKET WITH SWITCH	+2'-0" +4'-0"
5		GENERAL POINT 16A SOCKET WITH SWITCH	+2'-0" +4'-0"
6		MDF BOX	+5'-0"
7		CEILING ROSE	+7'-6"
8		SWITCH BOARD	+4'-0"
9		EXHAUST FAN	VENT.-HT.
10		LIGHT & POWER DISTRIBUTION BOARD	+5'-1"
11		Ø25MM POINT CONDUIT	CEILING
12		Ø25MM POWER CIRCUIT CONDUIT	CEILING FLOORING
13		Ø25MM LIGHT CIRCUIT CONDUIT	CEILING FLOORING
14		CEILING FAN	CEILING

ARCHITECT

ARCHITECT :-
FRANK SQUARE
ARCHITECTURE | PLANNER | DESIGNER
C-49 VIDYA APARTMENT PARAS MARG,
BAPU NAGAR JAIPUR, (RAJ.)
Email-afranksquare@gmail.com
Mobile-9461302542

PROJECT :-

PROPOSED BUILDING AT
PLOT NO.54, 55 & 56, NANDAN
RESIDENCY, MURLIPURA
JAGATPURA, JAIPUR

BUILDER/DEVELOPER/CLIENT:-

CM BUILDERS

DRAWING TITLE:- MAIN PANEL SLD

BUILDING NAME TOWN SQVARE V

RAMESH KUMAWAT
M.E.P. CONSULTANT
B.E. CIVIL

M/s C.M BUILDERS
PARTNER

SUBMITTED FOR :-

PRELIMINARY	○	APPROVAL	○
PROPOSAL	○	FOR RERA	●

DATE :-
DRAWN :-
APPROVED :-
DRAWING NO.:-
NORTH :-
SCALE :-

CONSULTANT

AMP INFRA SERVICES
VILLA NO 16. SHUBHASIS GEETA
JAISINGHPURA, BHANKROTA &
CHIMANPURA.JAIPUR 302026
EMAIL ID- ampinfrajpr@gmail.com
CONTACT NO. :- 9462866389